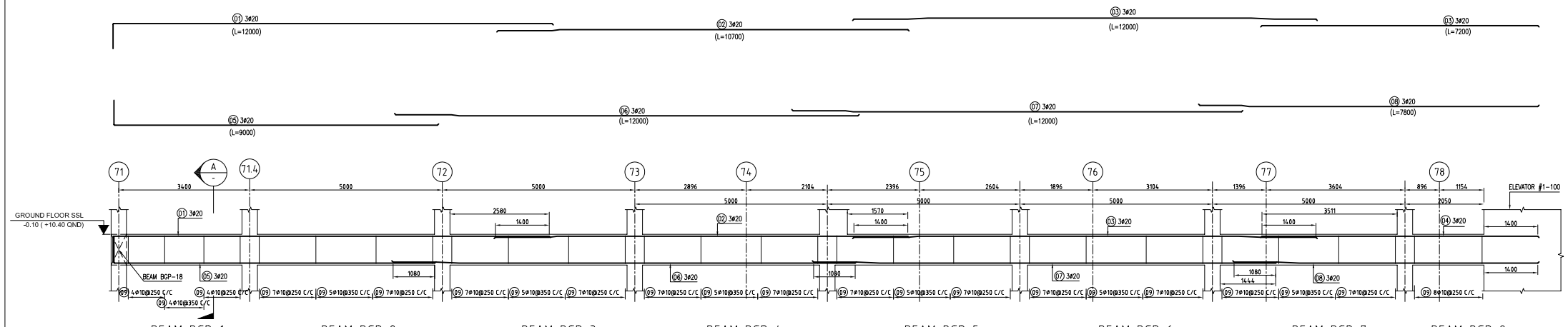

BEAM. BGP-1 (1 No.400x800) | BEAM. BGP-2 (1 No.400x800) | BEAM. BGP-3 (1 No.400x800) | BEAM. BGP-4 (1 No.400x800) | BEAM. BGP-5 (1 No.400x800) | BEAM. BGP-6 (1 No.400x800) | BEAM. BGP-7 (1 No.400x800) | BEAM. BGP-8 (1 No.400x800)

BEAM ELEV. ALONG GRID "CC"
1 : 50 (1 No.400x800)

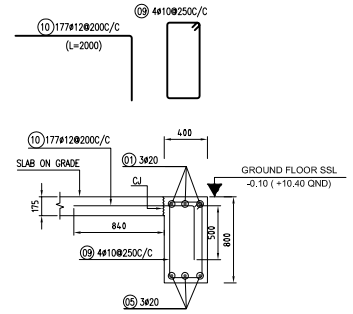

SECTION A
1:25

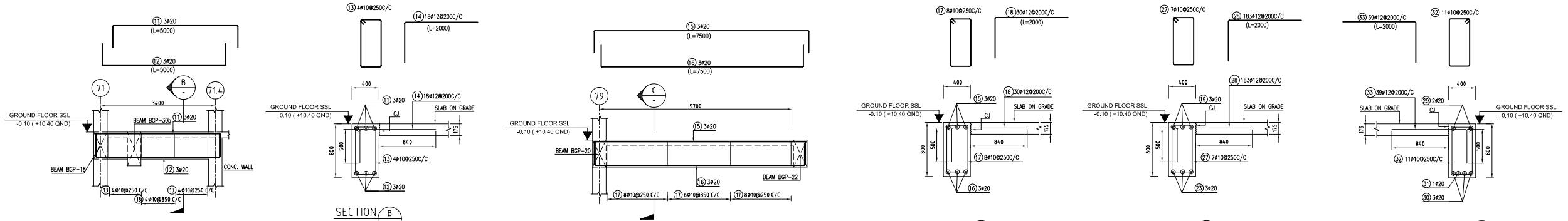

BEAM ELEV. BGP-9(ALONG GRID "CB")
1 : 50 (1 No.400x800)

SECTION B
1:25

BEAM ELEV. BGP-10(ALONG GRID "CB")
1 : 50 (1 No.400x800)

SECTION C
1:25

SECTION D
1:25

SECTION E
1:25

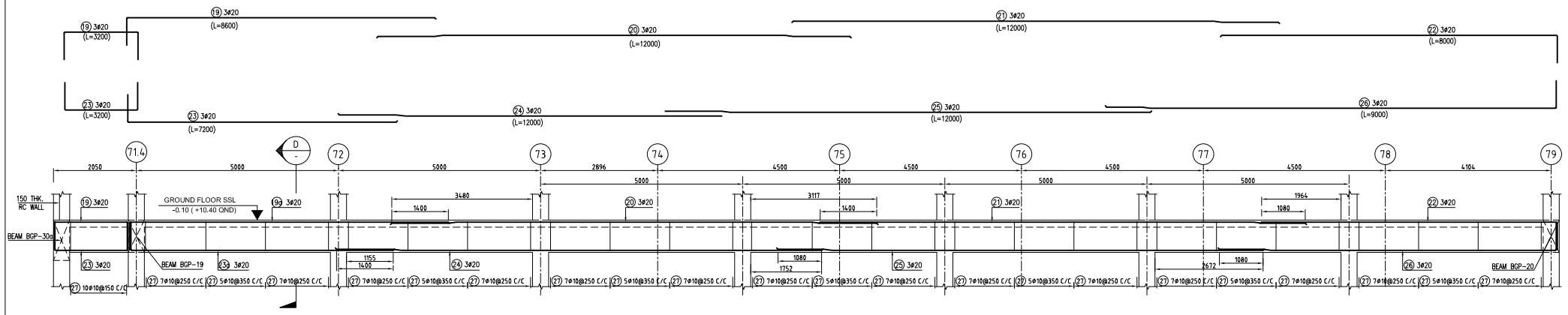

BEAM. BGP-30C (1 No.400x800) | BEAM. BGP-11 (1 No.400x800) | BEAM. BGP-12 (1 No.400x800) | BEAM. BGP-13 (1 No.400x800) | BEAM. BGP-14 (1 No.400x800) | BEAM. BGP-15 (1 No.400x800) | BEAM. BGP-16 (1 No.400x800) | BEAM. BGP-17 (1 No.400x800)

BEAM ELEV. ALONG GRID "CA"

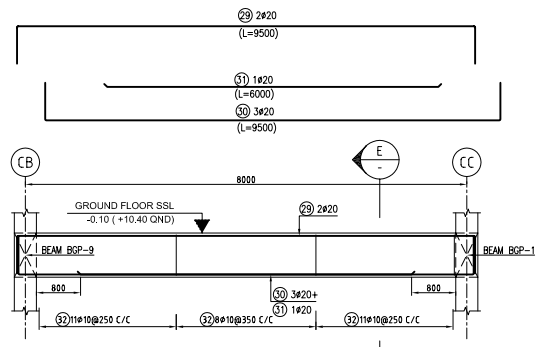

BEAM ELEV. BGP-18(ALONG GRID "71")
1 : 50 (1 No.400x800)

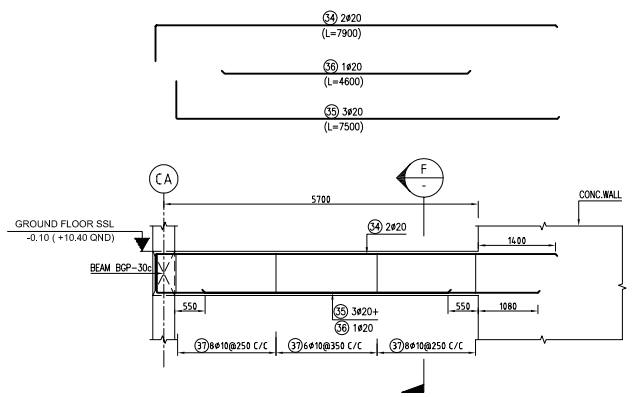

BEAM ELEV. BGP-19(ALONG GRID "71.4")
1 : 50 (1 No.400x800)

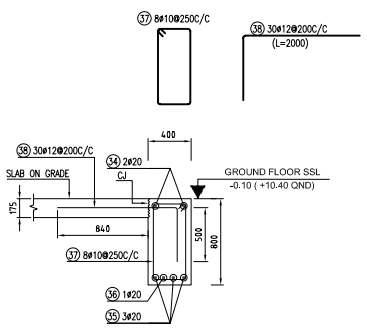

SECTION F
1:25

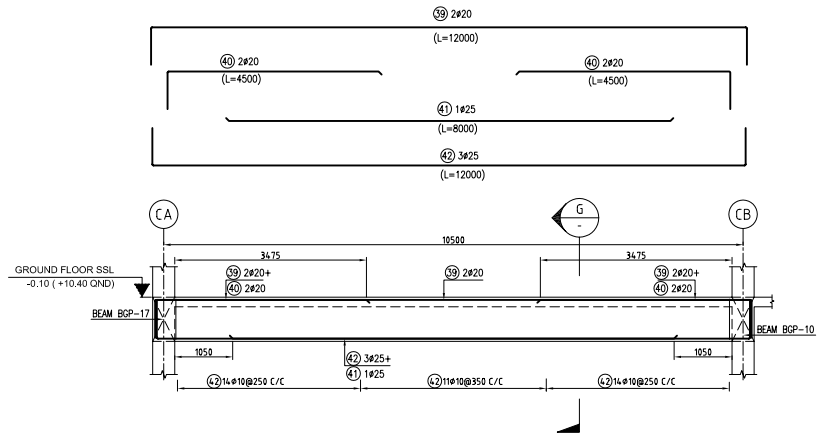

BEAM ELEV. BGP-20(ALONG GRID "79")
1 : 50 (1 No.400x800)

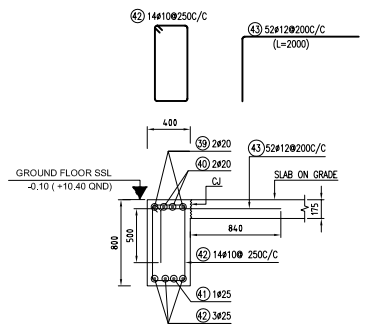

SECTION G
1:25

GENERAL NOTES:

THIS DRAWING MUST BE READ WITH DRAWING OF GENERAL NOTES # 1851B-SD-05-00001.

1. DIMENSIONS ARE IN MILLIMETRE AND LEVELS ARE IN METERS.
2. BAR BENDING SCHEDULE ACCORDING TO BS 8666
3. DETAILING SYMBOLS AND NOTATIONS AS FOLLOWS:

(01) 8 # 20 @150-B
01 = BAR MARK
8 = NUMBER OF BARS
# = BAR SPECIFICATION.
20 = BAR DIAMETER
150 = BAR SPACING CENTER TO CENTER
B = BAR LOCATION
4. CJ - CONSTRUCTION JOINT

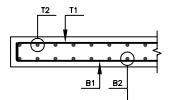

KEYPLAN

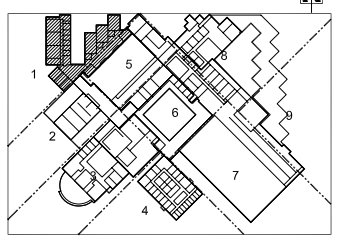

APPROVED	
APPROVED WITH COMMENTS	
NOT APPROVED / REJECTED	
COMMENTED AND RESUBMIT	
ENG.	R.E.
DATE	DATE

TRANSMITTAL NO.	REV.	DATE:14/06/2008

Certified for co-ordination with contract documents

DEPARTMENT	COMPANY	SIGNATURE	DATE	
HVAC				
PL & FF				
ELECTRICAL				
TEL/BAS/FP				
CIVIL				
OTHERS				

REFERENCE DRAWINGS

DWG. NO.	REV.	DWG. NO.	REV.	DWG. NO.	REV.
1851-2210-001 TO 002	1				
1851-2302-001 TO 002	0				
1851-2302-002 TO 003	1				
1851-2600-002 TO 003	1				

SHOP DRAWING

REV.	DESCRIPTION	DATE	DWN	CHKD	APPD	APPD
A	ISSUED FOR APPROVAL	19/07/2008				

Program & Construction Management | Executive Architect

Contractor | Sub Contractor

TITLE

GROUND FLOOR BEAM ELEVATION
ZONE-1 SEGMENT 1 PART OF SEGMENT 2

THIS IS A CAD DRAWING AND MUST NOT BE ALTERED MANUALLY

DRAWING NUMBER:	SCALE: 1:50/25	ORIG. DWG SIZE: A0	REV.
1851B-SD-05-00012	Sht. 001 Con't on 002		A

CAD FILE NAME:1185B-SD-05-00012 SH. 001-REV.A